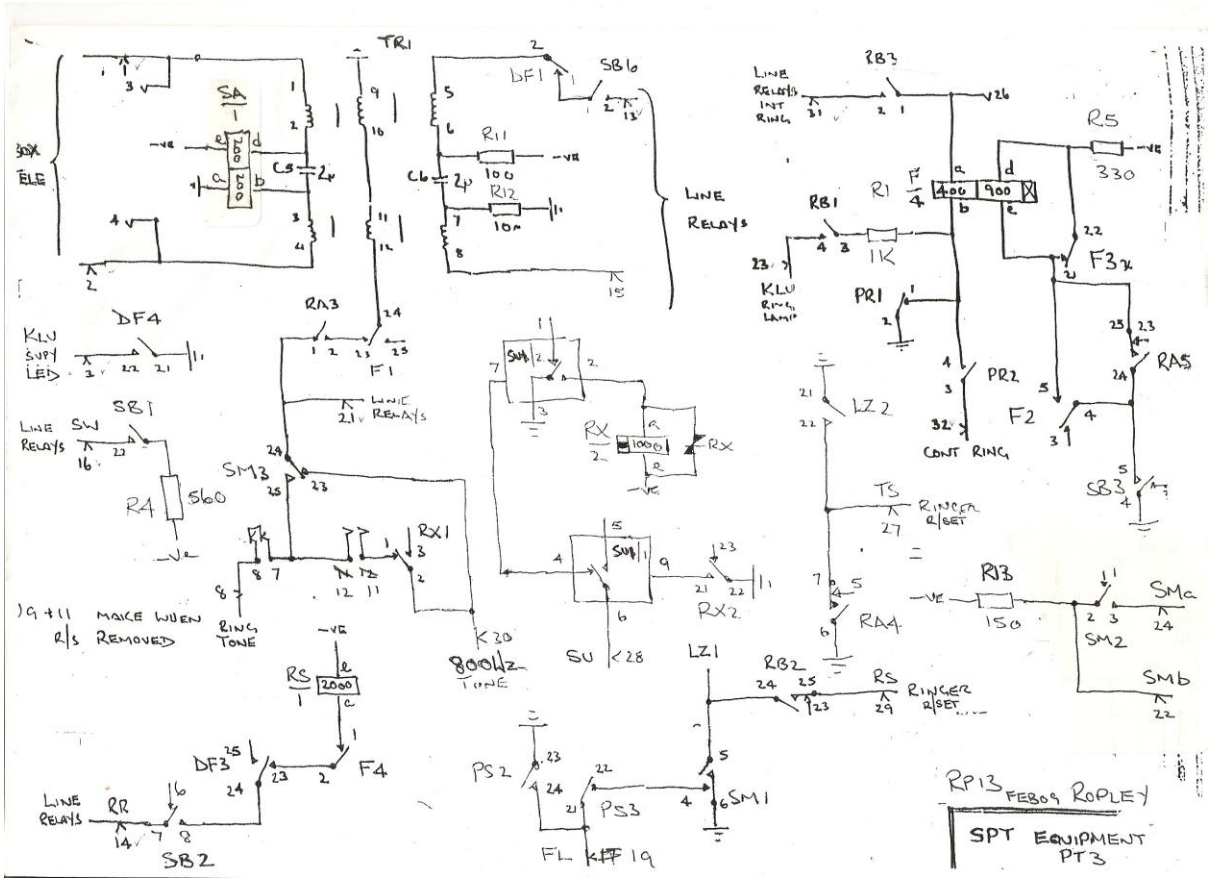
TR1
SA
SB6
DF1
R11
100
R12
10M
C6
C5
LINE RELAYS
RB3
LINE RELAYS INT RING
R5
330
R1
RB1
1K
KLU RING LAMP
PR1
F3
PR2
F2
RA5
SB3
CONT RING
LZ2
TS
RINGER R/SET
RA4
R3
150
SMa
SM2
SMb
RB2
RS
RINGER R/SET
LZ1
SM1
PS2
PS3
FL
RP13 FEB09 ROPLEY
SPT EQUIPMENT PT3
DF4
KLU SUPY LED
RA3
F1
LINE RELAYS
SB1
LINE RELAYS SW
R4
560
SM3
RX1
RX
RX2
SU
K20
800Hz TONE
RING TONE
9 + 11 MAKE WHEN R/S REMOVED
RS
2000
DF3
F4
LINE RELAYS
RR
SB2