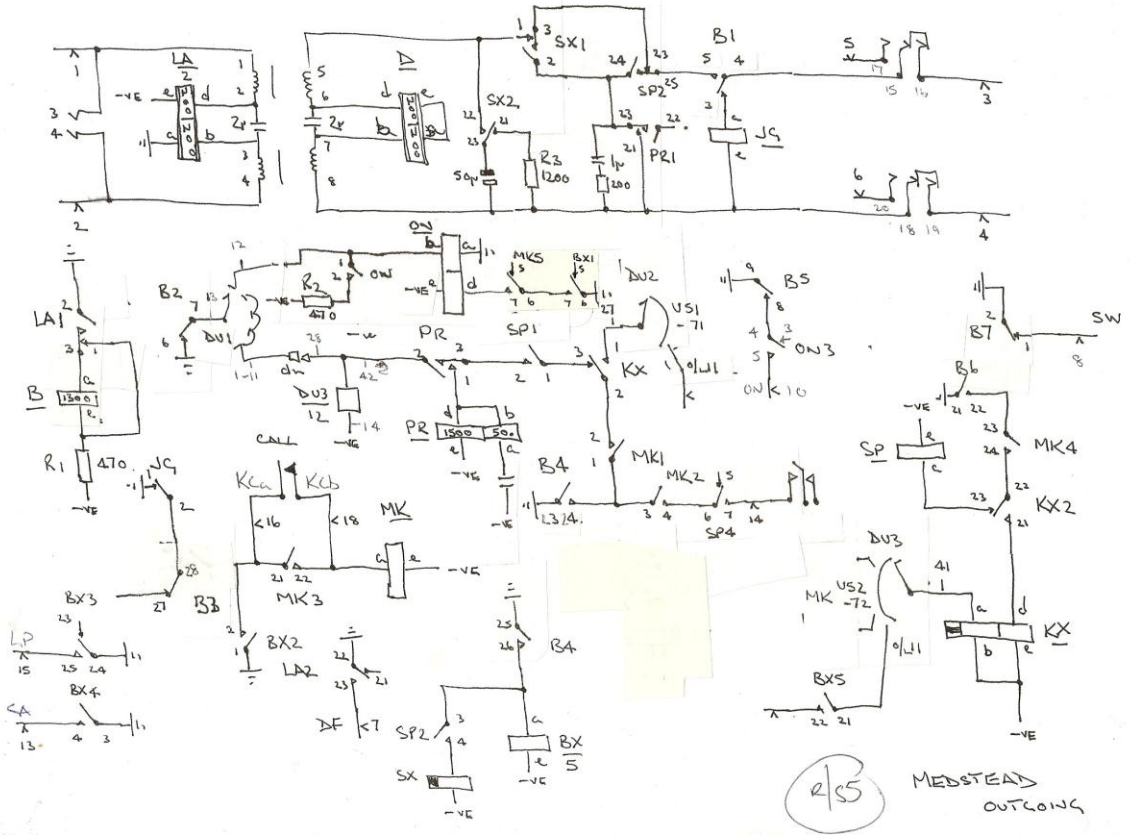
LA
D
SX1
SX2
B1
SP2
JC
PR1
R3
1200
50μ
1μ
200
ON
MK5
BX1
DU2
B5
ON3
US1
-71
SW
B7
B6
MK4
KX2
SP
DU3
US2
-72
KX
BX5
LA1
B2
DU1
R2
470
PR
SP1
KX
B
1500
R1
470
JC
DU3
12
CALL
Kca
Kcb
MK
MK3
BX3
B3
BX2
LA2
DF
SP2
SX
B4
BX
5
MK1
MK2
SP4
LP
CA
BX4
R/S
MEDSTEAD
OUTGOING